PLASTIC SQUARE INDUCTIVE PROXIMITY SENSOR (10-30VDC)

Q25x50x10	
●	○
2 mm	4 mm
PBT	
●	

Q26x40x12	
●	○
2 mm	4 mm
PBT	
●	

Q30x30x52	
●	○
10 mm	15 mm
PBT	
●	

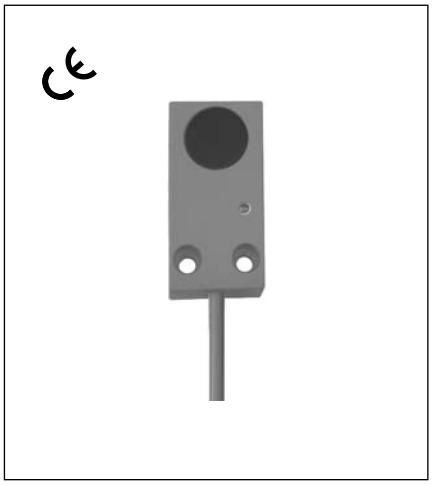

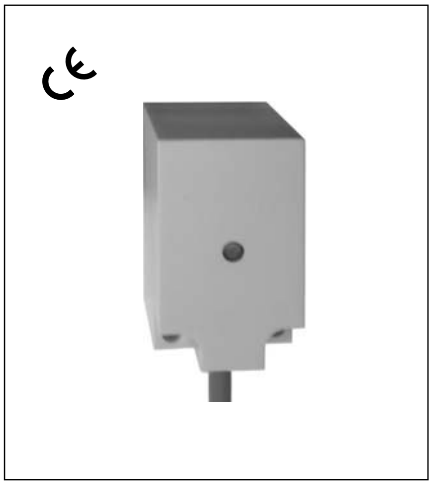

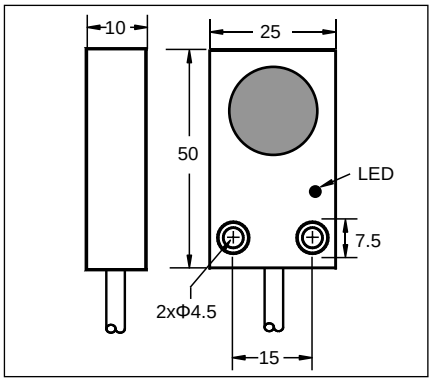

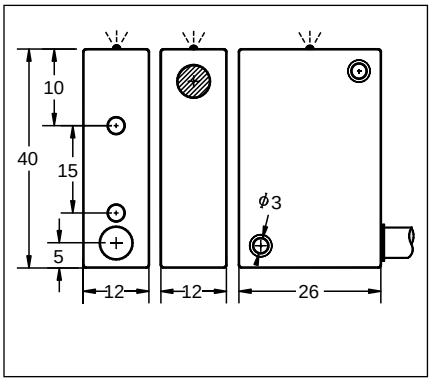

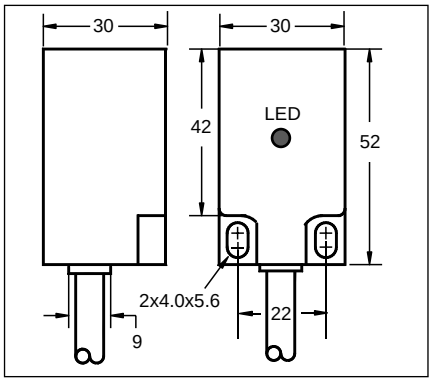

<10%	
<10mA	
200mA	
<0.01mA	
<1.5V	
300Hz	100Hz
0.5ms/0.5ms	1ms/1ms
<15%(Sr)	
<1.0%(Sr)	
IP67	
-25℃- +70℃	
<10%(Sr)	
Yes	
220mA	
PBT	
2M Cable (4.0 Φ 3x0.25)	
approx.110 g	

<10%	
<10mA	
200mA	
<0.01mA	
<1.5V	
300Hz	100KHz
0.5ms/0.5ms	1ms/1ms
<15%(Sr)	
<1.0%(Sr)	
IP67	
-25℃- +70℃	
<10%(Sr)	
Yes	
220mA	
PBT	
2M Cable (4.0 Φ 3x0.25)	
approx.120 g	

<10%	
<10mA	
200mA	
<0.01mA	
<1.5V	
300Hz	100Hz
0.5ms/0.5ms	1ms/1ms
<15%(Sr)	
<1.0%(Sr)	
IP67	
-25℃- +70℃	
<10%(Sr)	
Yes	
220mA	
PBT	
2M Cable (4.0 Φ 3x0.25)	
approx.135 g	

IPS-Q2502N-A1VN2	1*	IPN-Q2504N-A1VN2
IPS-Q2502N-B1VN2	2	IPN-Q2504N-B1VN2
IPS-Q2502P-A1VN2	3	IPN-Q2504P-A1VN2
IPS-Q2502P-B1VN2	4	IPN-Q2504P-B1VN2

IPS-Q2602N-A1LN2	1*	IPN-Q2604N-A1LN2
IPS-Q2602N-B1LN2	2	IPN-Q2604N-B1LN2
IPS-Q2602P-A1LN2	3	IPN-Q2604P-A1LN2
IPS-Q2602P-B1LN2	4	IPN-Q2604P-B1LN2

IPS-Q3010N-A1VN2	1*	IPN-Q3015N-A1VN2
IPS-Q3010N-B1VN2	2	IPN-Q3015N-B1VN2
IPS-Q3010P-A1VN2	3	IPN-Q3015P-A1VN2
IPS-Q3010P-B1VN2	4	IPN-Q3015P-B1VN2

* Wiring diagram number. Please see the relevant wiring diagram shown on Page 013 and Page 014.

EXTENDED RANGE INDUCTIVE PROXIMITY SENSOR (10-30VDC)

Q25x50x10	
●	○
4 mm	8 mm
PBT	
●	

Q26x40x12	
●	○
4 mm	8 mm
PBT	
●	

Q30x30x52	
●	○
16 mm	25 mm
PBT	
●	

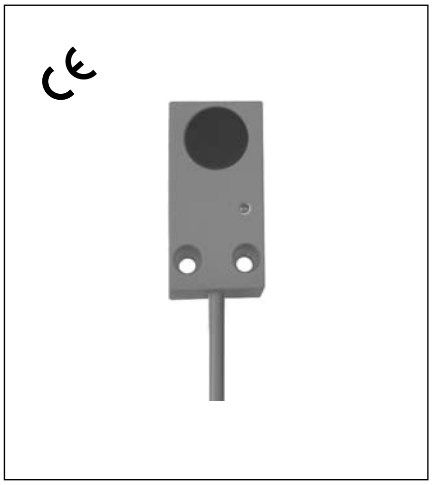

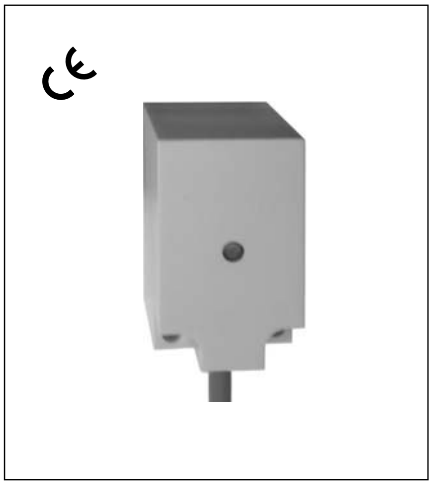

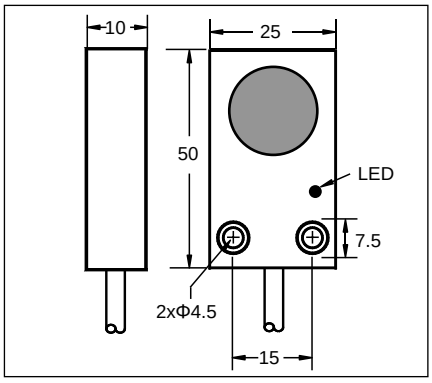

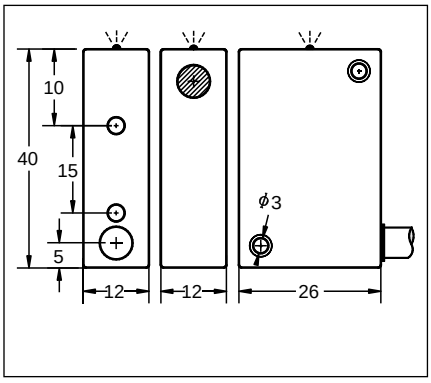

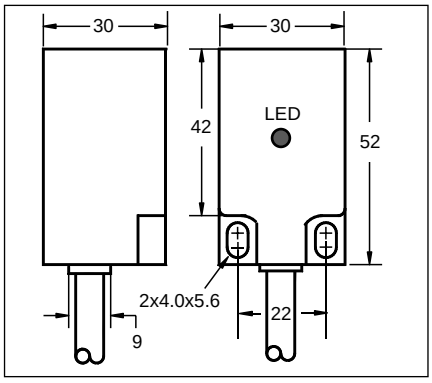

<10%	
<10mA	
200mA	
<0.01mA	
<2.0V	
300Hz	100Hz
0.5ms/0.5ms	1ms/1ms
<15%(Sr)	
<1.0%(Sr)	
IP67	
-25℃- +70℃	
<10%(Sr)	
Yes	
220mA	
PBT	
2M Cable (4.0 Φ 3x0.25)	
approx.110 g	

<10%	
<10mA	
200mA	
<0.01mA	
<2.0V	
300Hz	100Hz
0.5ms/0.5ms	1ms/1ms
<15%(Sr)	
<1.0%(Sr)	
IP67	
-25℃- +70℃	
<10%(Sr)	
Yes	
220mA	
PBT	
2M Cable (4.0 Φ 3x0.25)	
approx.120 g	

<10%	
<10mA	
200mA	
<0.01mA	
<2.0V	
150Hz	100Hz
1ms/1ms	1ms/1ms
<15%(Sr)	
<1.0%(Sr)	
IP67	
-25℃- +70℃	
<10%(Sr)	
Yes	
220mA	
PBT	
2M Cable (4.0 Φ 3x0.25)	
approx.135 g	

IPS-Q2504N-A1VN2	1*	IPN-Q2508N-A1VN2
IPS-Q2504N-B1VN2	2	IPN-Q2508N-B1VN2
IPS-Q2504P-A1VN2	3	IPN-Q2508P-A1VN2
IPS-Q2504P-B1VN2	4	IPN-Q2508P-B1VN2

IPS-Q2604N-A1LN2	1*	IPN-Q2608N-A1LN2
IPS-Q2604N-B1LN2	2	IPN-Q2608N-B1LN2
IPS-Q2604P-A1LN2	3	IPN-Q2608P-A1LN2
IPS-Q2604P-B1LN2	4	IPN-Q2608P-B1LN2

IPS-Q3016N-A1VN2	1*	IPN-Q3025N-A1VN2
IPS-Q3016N-B1VN2	2	IPN-Q3025N-B1VN2
IPS-Q3016P-A1VN2	3	IPN-Q3025P-A1VN2
IPS-Q3016P-B1VN2	4	IPN-Q3025P-B1VN2

* Wiring diagram number. Please see the relevant wiring diagram shown on Page 013 and Page 014.

LONG RANGE INDUCTIVE PROXIMITY SENSOR (10-30VDC)

Q25x50x10	
●	○
6 mm	10 mm
PBT	
●	

Q26x40x12	
●	○
6 mm	10 mm
PBT	
●	

Q30x30x52	
●	○
20 mm	30 mm
PBT	
●	

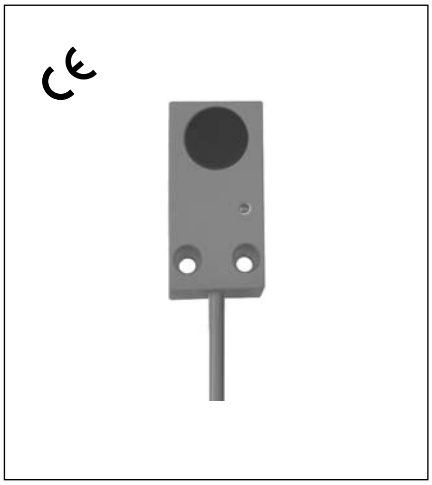

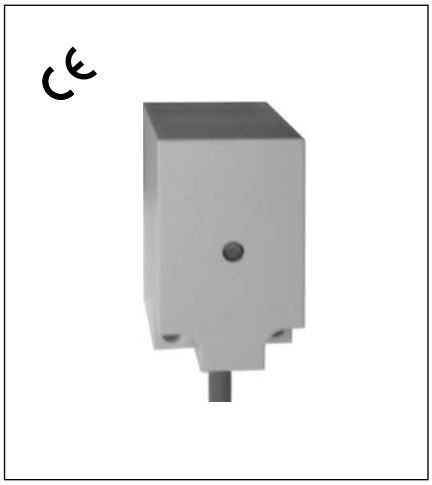

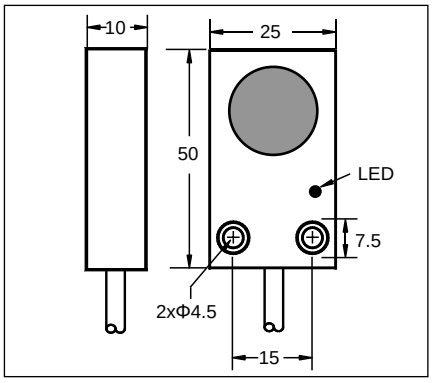

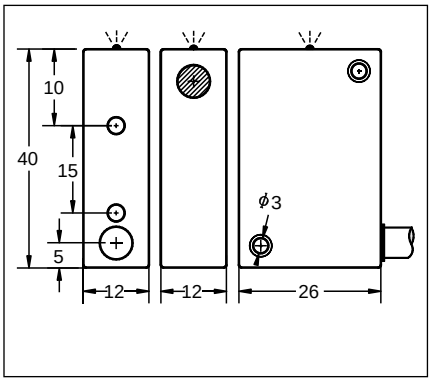

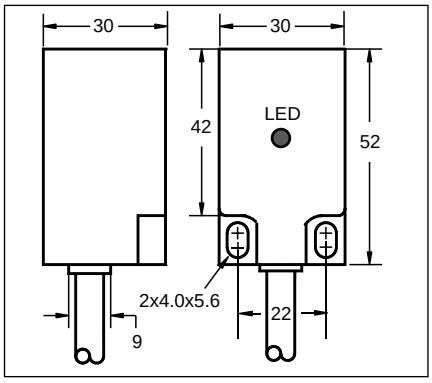

<10%		<10%		<10%	
<10mA		<10mA		<10mA	
200mA		200mA		200mA	
<0.01mA		<0.01mA		<0.01mA	
<2.0V		<2.0V		<2.0V	
300Hz	100Hz	300Hz	100Hz	150Hz	100Hz
0.5ms/0.5ms	1ms/1ms	0.5ms/0.5ms	1ms/1ms	1ms/1ms	1ms/1ms
<15%(Sr)		<15%(Sr)		<15%(Sr)	
<1.0%(Sr)		<1.0%(Sr)		<1.0%(Sr)	
IP67		IP67		IP67	
-25℃- +70℃		-25℃- +70℃		-25℃- +70℃	
<10%(Sr)		<10%(Sr)		<10%(Sr)	
Yes		Yes		Yes	
220mA		220mA		220mA	
PBT		PBT		PBT	
2M Cable (4.0 Φ 3x0.25)		2M Cable (4.0 Φ 3x0.25)		2M Cable (4.0 Φ 3x0.25)	
approx.110 g		approx.120 g		approx.135 g	

IPS-Q2506N-A1VN2	1*	IPN-Q2510N-A1VN2	IPS-Q2606N-A1LN2	1*	IPN-Q2610N-A1LN2	IPS-Q3020N-A1VN2	1*	IPN-Q3030N-A1VN2
IPS-Q2506N-B1VN2	2	IPN-Q2510N-B1VN2	IPS-Q2606N-B1LN2	2	IPN-Q2610N-B1LN2	IPS-Q3020N-B1VN2	2	IPN-Q3030N-B1VN2
IPS-Q2506P-A1VN2	3	IPN-Q2510P-A1VN2	IPS-Q2606P-A1LN2	3	IPN-Q2610P-A1LN2	IPS-Q3020P-A1VN2	3	IPN-Q3030P-A1VN2
IPS-Q2506P-B1VN2	4	IPN-Q2510P-B1VN2	IPS-Q2606P-B1LN2	4	IPN-Q2610P-B1LN2	IPS-Q3020P-B1VN2	4	IPN-Q3030P-B1VN2

* Wiring diagram number. Please see the relevant wiring diagram shown on Page 013 and Page 014.