AC/DC CAPACITIVE PROXIMITY SENSOR (20-250VAC/DC)

Diameter	M30		M30	
● Shielded ○ non-Shielded	●	○	●	○
Switching Distance, Sn: mm	2-20 mm	2-30 mm	2-20 mm	2-30 mm
Housing Material	PBT		PBT	
● With LED ○ Without LED	●		●	

Picture

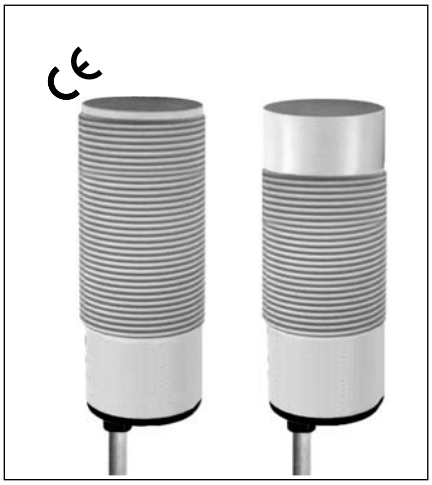

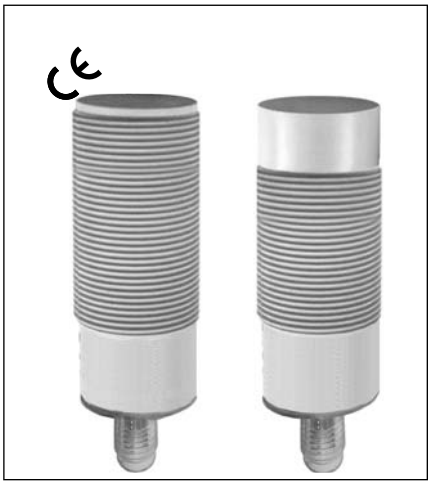

Dimensions (unit: mm)

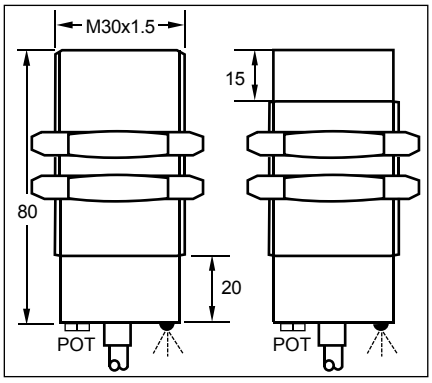

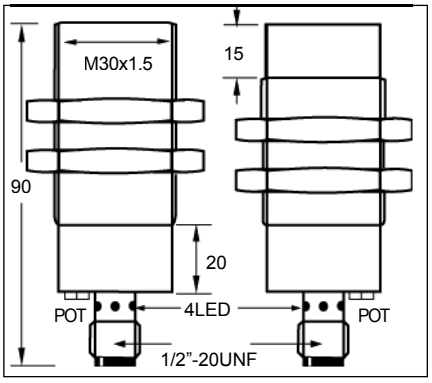

No Load Current	DC Ripple <10%	DC Ripple <10%
Max. Load current	<2.5mA	<2.5mA
Leakage Current	200mA	200mA
Surge Current	<2.5mA	<2.5mA
Min. Load Current	2.2A(20ms)	2.2A(20ms)
Voltage Drop	5mA	5mA
Switching Frequency	<10VAC ; 8VDC	<10VAC ; 8VDC
Response Time	<25Hz AC ; 40Hz DC	<25Hz AC ; 40Hz DC
Switching Hysteresis	10ms/10ms	10ms/10ms
Repeat Accuracy	<15%(Sr)	<15%(Sr)
Protection Category	<1%(Sr)	<1%(Sr)
Operating Temperature	IP67	IP67
Temperature Drift	-25℃- +70℃	-25℃- +70℃
Short Circuit Protection	<±15%(Sr)	<±15%(Sr)
Material Active Face	PBT	PBT
Connecting type	2M Cable (5.0 ⌀ 2x0.5)	Micro connector
Weight	approx.190 g	approx.125 g

AC 20-250V N.O.	CPS-M3020U-A8VN2	13*	CPN-M3030U-A8VN2	CPS-M3020U-A8MN3	13*	CPN-M3030U-A8MN3
AC 20-250V N.C.	CPS-M3020U-B8VN2	14	CPN-M3030U-B8VN2	CPS-M3020U-B8MN3	14	CPN-M3030U-B8MN3
AC 20-250V N.O. or N.C. Changeable						

* Wiring diagram number. Please see the relevant wiring diagram shown on Page 013 to Page 015.