AC CAPACITIVE PROXIMITY SENSOR (20-250VAC)

Diameter	M30		M30	
● Shielded ○ non-Shielded	●	○	●	○
Switching Distance, Sn: mm	2-20 mm	2-30 mm	2-20 mm	2-30 mm
Housing Material	Nickel plated brass		Nickel plated brass	
● With LED ○ Without LED	●		●	

Picture

Dimensions (unit: mm)

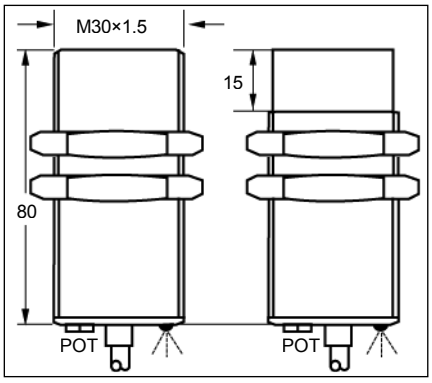

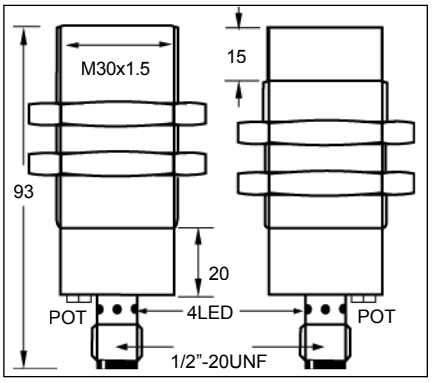

No Load Current	<2.5mA	<2.5mA
Max. Load current	300mA	300mA
Leakage Current	<2.5mA	<2.5mA
Surge Current	5A	5A
Min. Load Current	5mA	5mA
Voltage Drop	<9VAC AT 300mA	<9VAC AT 300mA
Switching Frequency	<25Hz	<25Hz
Response Time	10ms/10ms	10ms/10ms
Switching Hysteresis	<15%(Sr)	<15%(Sr)
Repeat Accuracy	<5%(Sr)	<5%(Sr)
Protection Category	IP67	IP67
Operating Temperature	-25℃- +70℃	-25℃- +70℃
Temperature Drift	<10%(Sr)	<10%(Sr)
Short Circuit Protection	NO	NO
Material Active Face	PBT	PBT
Connecting type	2M Cable (5.0 ⌀ 3x0.34)	Micro connector
Weight	approx.230 g	approx.150 g

AC 20-250V N.O.	CBS-M3020A-A7VN2	11*	CBN-M3030A-A7VN2	CBS-M3020A-A7MN3	11*	CBN-M3030A-A7MN3
AC 20-250V N.C.	CBS-M3020A-B7VN2	12	CBN-M3030A-B7VN2	CBS-M3020A-B7MN3	12	CBN-M3030A-B7MN3
AC 20-250V N.O. or N.C. Changeable						

* Wiring diagram number. Please see the relevant wiring diagram shown on Page 013 to Page 015.