HIGH TEMPERATURE INDUCTIVE PROXIMITY SENSOR (20-250VAC)

Diameter	M18		M18	
● Shielded ○ non-Shielded	●	○	●	○
Switching Distance, Sn: mm	5 mm	8 mm	5 mm	8 mm
Housing Material	Nickel plated brass		Nickel plated brass	
● With LED ○ Without LED	●		●	

Picture

Dimensions (unit: mm)

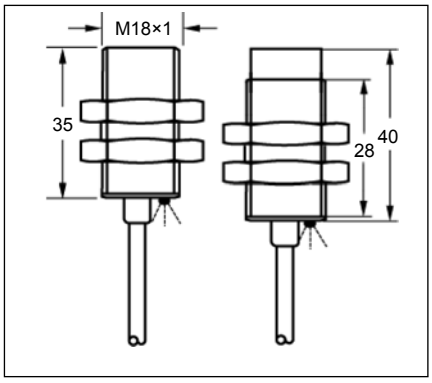

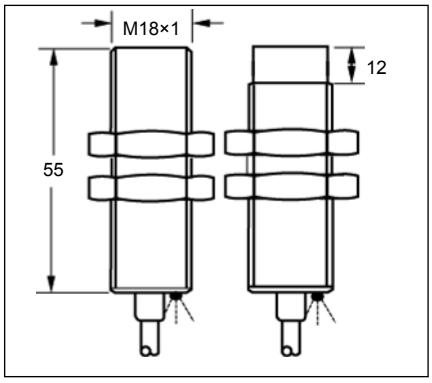

No Load Current	<1.8mA	<1.8mA
Max. Load current	400mA	400mA
Leakage Current	<1.8mA	<1.8mA
Surge Current	5A(20ms)	5A(20ms)
Min. Load Current	5mA	5mA
Voltage Drop	<8VAC AT 400mA	<8VAC AT 400mA
Switching Frequency	<25HZ	<25Hz
Response Time	10ms/10ms	10ms/10ms
Switching Hysteresis	<15%(Sr)	<15%(Sr)
Repeat Accuracy	<1.0%(Sr)	<1.0%(Sr)
Protection Category	IP67	IP67
Operating Temperature	-25℃- +110℃	-25℃- +110℃
Temperature Drift	<10%(Sr)	<10%(Sr)
Short Circuit Protection	NO	NO
Material Active Face	PTFE	PTFE
Connecting type	2M Sillicon Cable (4.0 Φ 3x0.25)	2M Sillicon Cable (4.0 Φ 3x0.25)
Weight	approx.155 g	approx.162 g

AC 20-250V N.O.	IBS-M1805A-A7SS2/T	11*	IBN-M1808A-A7SS2/T	IBS-M1805A-A7SN2/T	11*	IBN-M1808A-A7SN2/T
AC 20-250V N.C.	IBS-M1805A-B7SS2/T	12	IBN-M1808A-B7SS2/T	IBS-M1805A-B7SN2/T	12	IBN-M1808A-B7SN2/T
AC 20-250V N.O. or N.C. Changeable						

* Wiring diagram number. Please see the relevant wiring diagram shown on Page 013 to Page 015.