AC/DC CAPACITIVE PROXIMITY SENSOR (20-250VAC/DC)

Diameter	M18		M18	
● Shielded ○ non-Shielded	●	○	●	○
Switching Distance, Sn: mm	2-8 mm	2-15 mm	2-8 mm	2-15 mm
Housing Material	Nickel plated brass		Nickel plated brass	
● With LED ○ Without LED	●		●	

Picture

Dimensions (unit: mm)

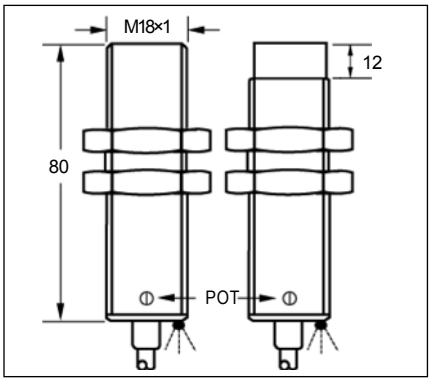

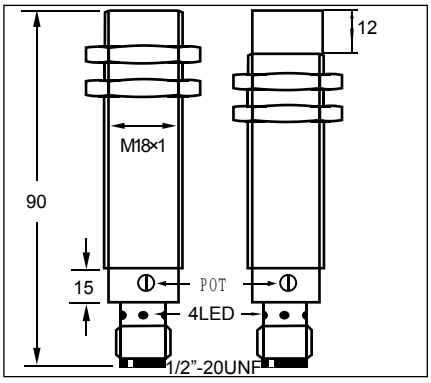

Ripple	DC Ripple <10%			DC Ripple <10%	
No Load Current	<2.5mA			<2.5mA	
Max. Load current	200mA			200mA	
Leakage Current	<2.5mA			<2.5mA	
Surge Current	2.2A(20ms)			2.2A(20ms)	
Min. Load Current	5mA			5mA	
Voltage Drop	<10VAC ; 8VDC			<10VAC ; 8VDC	
Switching Frequency	<25Hz AC ; 40Hz DC			<25Hz AC ; 40Hz DC	
Response Time	10ms/10ms			10ms/10ms	
Switching Hysteresis	<15%(Sr)			<15%(Sr)	
Repeat Accuracy	<1%(Sr)			<1%(Sr)	
Protection Category	IP67			IP67	
Operating Temperature	-25℃- +70℃			-25℃- +70℃	
Temperature Drift	<±15%(Sr)			<±15%(Sr)	
Material Active Face	PBT			PBT	
Connecting type	2M Cable (5.0 ⌀ 3x0.34)			Micro connector	
Weight	approx.115 g			approx.70 g	
AC/DC 20-250V N.O.	CBS-M1808U-A8VN2	15*	CBN-M1815U-A8VN2	CBS-M1808U-A8MN3	15* CBN-M1815U-A8MN3
AC/DC 20-250V N.C.	CBS-M1808U-B8VN2	16	CBN-M1815U-B8VN2	CBS-M1808U-B8MN3	16 CBN-M1815U-B8MN3
AC/DC 20-250V N.O. or N.C. Changeable					

* Wiring diagram number. Please see the relevant wiring diagram shown on Page 013 to Page 015.