AC/DC INDUCTIVE PROXIMITY SENSOR (20-250VAC/DC)

Diameter	M12		M12	
● Shielded ○ non-Shielded	●	○	●	○
Switching Distance, Sn: mm	2 mm	4 mm	2 mm	4 mm
Housing Material	Nickel plated brass		Nickel plated brass	
● With LED ○ Without LED	●		●	

Picture

Dimensions (unit: mm)

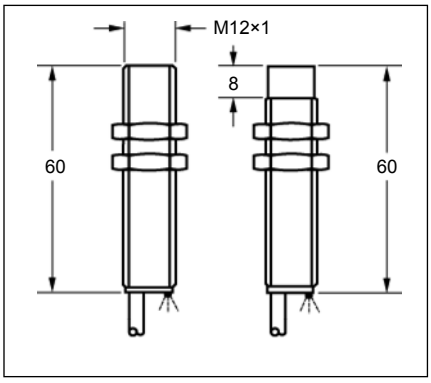

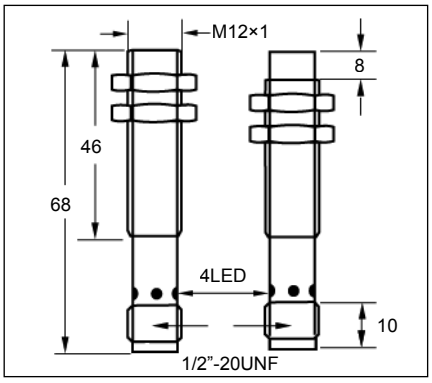

No Load Current	<2.5mA		<2.5mA	
Max. Load current	100mA		100mA	
Leakage Current	<2.5mA		<2.5mA	
Surge Current	2.2A(20ms)		2.2A(20ms)	
Min. Load Current	5mA		5mA	
Voltage Drop	<10VAC; 8VDC		<10VAC; 8VDC	
Switching Frequency	25Hz AC; 40Hz DC		25Hz AC; 40Hz DC	
Response Time	10ms/10ms		10ms/10ms	
Switching Hysteresis	<15%(Sr)		<15%(Sr)	
Repeat Accuracy	<1.0%(Sr)		<1.0%(Sr)	
Protection Category	IP67		IP67	
Operating Temperature	-25℃- +70℃		-25℃- +70℃	
Temperature Drift	<10%(Sr)		<10%(Sr)	
Short Circuit Protection	NO		NO	
Material Active Face	POM	PBT	POM	PBT
Connecting type	2M Cable (4.0 ⌀ 3x0.25)		Micro connector	
Weight	approx.77 g		approx.32 g	

AC/DC 20-250V N.O.	IBS-M1202U-A8VN2	15*	IBN-M1204U-A8VN2	IBS-M1202U-A8MN3	15*	IBN-M1204U-A8MN3
AC/DC 20-250V N.C.	IBS-M1202U-B8VN2	16	IBN-M1204U-B8VN2	IBS-M1202U-B8MN3	16	IBN-M1204U-B8MN3
AC/DC 20-250V N.O. or N.C. Changeable						

* Wiring diagram number. Please see the relevant wiring diagram shown on Page 013 to Page 015.