AC INDUCTIVE PROXIMITY SENSOR (20-250VAC)

Diameter	Q18C	Q26x40x12	
● Shielded ○ non-Shielded	○	●	○
Switching Distance, Sn: mm	4 mm	2 mm	4 mm
Housing Material	ABS	PBT	
● With LED ○ Without LED	●	●	

Picture

Dimensions (unit: mm)

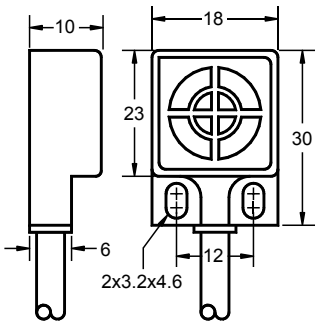

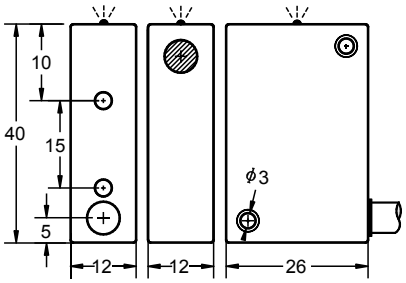

No Load Current	<1.8mA		<1.8mA	
Max. Load current	400mA		400mA	
Leakage Current	<1.8mA		<1.8mA	
Surge Current	5A(20ms)		5A(20ms)	
Min. Load Current	5mA		5mA	
Voltage Drop	<8VAC AT 400mA		<8VAC AT 400mA	
Switching Frequency	<25Hz		<25Hz	
Response Time	10ms/10ms		10ms/10ms	
Switching Hysteresis	<15%(Sr)		<15%(Sr)	
Repeat Accuracy	<1.0%(Sr)		<1.0%(Sr)	
Protection Category	IP67		IP67	
Operating Temperature	-25℃- +70℃		-25℃- +70℃	
Temperature Drift	<10%(Sr)		<10%(Sr)	
Short Circuit Protection	NO		NO	
Material Active Face	POM		POM	
Connecting type	2M Cable (4.0 ϕ 2x0.34)		2M Cable (4.0 ϕ 2x0.34)	
Weight	approx.55 g		approx.130 g	
AC 20-250V N.O.	IPN-Q18C04A-A7VN2	9*	IPS-Q2602A-A7LN2	9*	IPN-Q2604A-A7LN2
AC 20-250V N.C.	IPN-Q18C04A-B7VN2	10	IPS-Q2602A-B7LN2	10	IPN-Q2604A-B7LN2
AC 20-250V N.O. or N.C. Changeable					

* Wiring diagram number. Please see the relevant wiring diagram shown on Page 013 to Page 015.