AC INDUCTIVE PROXIMITY SENSOR (20-250VAC)

Diameter	M12	
● Shielded ○ non-Shielded	●	○
Switching Distance, Sn: mm	2 mm	4 mm
Housing Material	PBT	
● With LED ○ Without LED	●	

Picture

Dimensions (unit: mm)

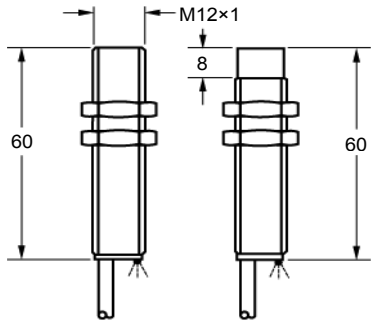

No Load Current	<1.8mA
Max. Load current	400mA
Leakage Current	<1.8mA
Surge Current	5A(20ms)
Min. Load Current	5mA
Voltage Drop	<8VAC AT 400mA
Switching Frequency	<25Hz
Response Time	10ms/10ms
Switching Hysteresis	<15%(Sr)
Repeat Accuracy	<1.0%(Sr)
Protection Category	IP67
Operating Temperature	-25℃- +70℃
Temperature Drift	<10%(Sr)
Short Circuit Protection	NO
Material Active Face	PBT

Connecting type	2M Cable (4.0 ⌀ 2x0.34)
Weight	approx.70 g

AC 20-250V N.O.	IPS-M1202A-A7VN2 9*	IPN-M1204A-A7VN2
AC 20-250V N.C.	IPS-M1202A-B7VN2 10	IPN-M1204A-B7VN2
AC 20-250V N.O. or N.C. Changeable		

* Wiring diagram number. Please see the relevant wiring diagram shown on Page 013 to Page 015.